FTGMDC

FT - 8800 AIS

Automatic Identification System Class A

CHINA CLASSIFICATION SOCIETY (CCS) : FZ10T00001

REGISTER OF FISHING VESSEL OF P.R.C. : C00001000125

GMDSS

Product Features

- Complies With A.694 (17), IEC62287-1 2006-03 standard requirements
- With 6-inch LCD display to show ship static and dynamic data information
- AIS target approaching, sound and light alarm function
- Provided chinese and english display ,operation function
- Offers a variety input / output data interface port
- With navigation plan and operation function

Shishi Feitong Communication Equipment Co., Ltd.

FT-8800 AIS A

FTGMDC

Block Diagram

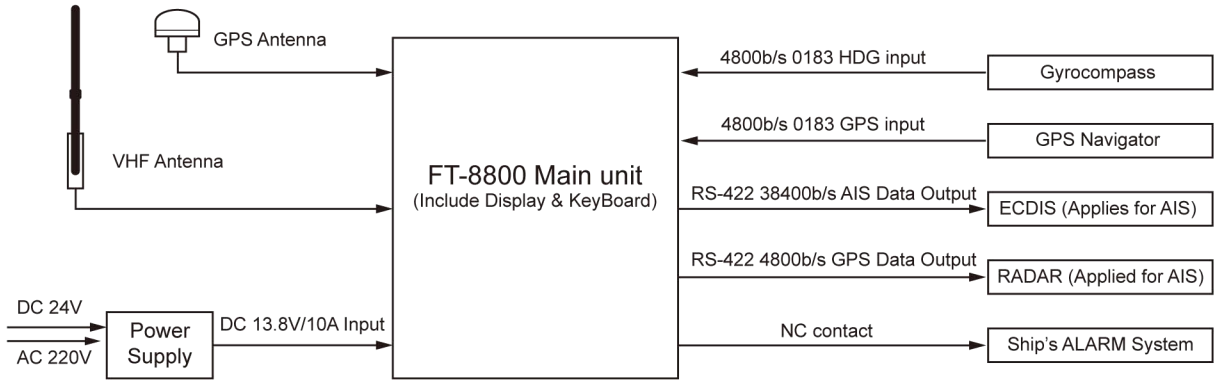

Main Unit

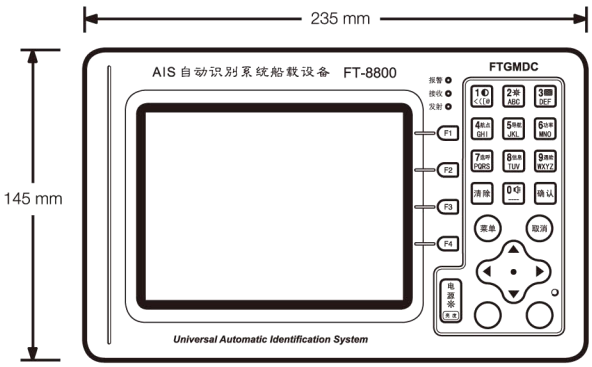

Antenna

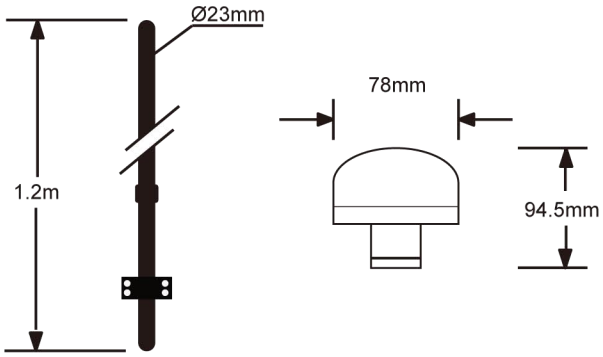

VHF Antenna ***GPS Antenna***

Technical Specification

Technical Specification

RF Unit	: 1 transmitter and 3 receivers
Frequency Range	: 156.025-162.025MHz
Communication Mode	: CSTDMA
Frequency Tolerance	: ±1000Hz
Display Screen	: FSTN 122 (W) × 92 (H) mm (6.0 inches)
Power Supply Voltage	: 12V DC or 24V DC
Operating Temperature	: -15℃~ + 55℃
Dimensions	: 235（W）*145（H）*70（D）mm

AIS Transmitter Section

Output Power	: 2w / 12.5w
Modulation Spectrum	: < -25dBw (<△fc<±10KHz)
	< -60dBw (± 25KHz<△fc<±6.25KHz)
Modulation Accuracy	: < 3400Hz (Bit 0,1)
	2400Hz±480Hz (Bit2,3)
	2400Hz±240Hz (Bit 4-199 or 00001111 Bit format)
	1740Hz±175Hz (0101 bit format)
Spurious Components	: -36dBm (9KHz-1GHz)
	-30dBm (1GHz-4GHz)

AIS Receiver Section

Reference Sensitivity	: ≤-107dBm（Package error rate ≤ 20%）
High Input Tolerance	: -77dBm（Package error rate ≤ 2%）
Co-channel Interference	: >10dB（Package error rate ≤ 20%）
Adjacent Channel Selectivity	: >70dB（Package error rate ≤ 20%）
Spurious Response Interference	: >70dB（Package error rate ≤ 20%）
Intermodulation Response Interference	: >65dB（Package error rate ≤ 20%）

Standard Parts :

- Antenna 156MHz VHF
- Cable ϕ5/10m
- GPS Antenna RG-58/U 50Ω

Note: Specifications are subject to be changed without notice.

Manufacturer :
Shishi Feitong Communication Equipment Co., Ltd.
Address : Fujian Shishi City Yong Ning Zhen Faith Toward Development Zone's Floor
TEL : 0595-88481988 88480988 88499888
FAX : 0595-88482988 http://www.cnft168.com

Worldwide Sole Distributor & Agent (Exclude Mainland) :
E-Trust Marine Service Co., Ltd.
Address : 19F-1,No.29, Hai Bian Rd., LingYa District , Kaohsiung City 80248, Taiwan
TEL : +886-7-269-5523 FAX : +886-7-269-5592
http://www.etrust-marine.com
E-mail: james.etrust@msa.hinet.net